SPDCPOE03

Power over ethernet 10 W module

Preliminary data

Features

- Input voltage range: 38.5 V to 60 V
- 10 W output
- Based on ST devices integrating standard PoE interface and current mode PVM controller
- IEEE 802.3af compliant (PoE standard)
- Class 0 (zero), 0-12.96 W input
- Output voltage 3.3 V
- Output current 3 A
- Output voltage ± 5 %
- Ripple 1 % rms
- Transient response ±5 %, ½ load to full load
- Operating temperature range -40 °C to 70 °C
- Input transient suppressor
- Under voltage lockout
- Soft-start
- Short circuit protection
- 1500 VDC input/output insulation
- Input and output will be normally maintained within SELV limit
- Very compact size, about 86x24.2x17 mm
- Vertical THT package
- RoHS compliant
- UL 94V-0 flammability

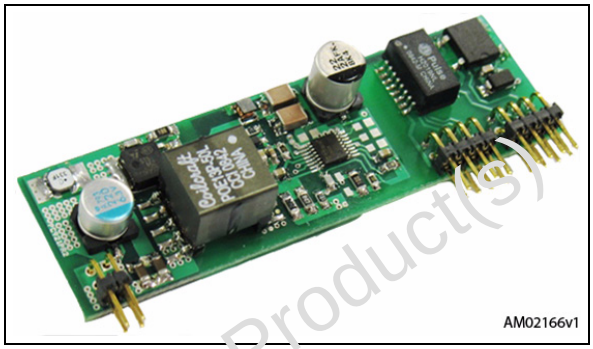

Applications

- The target applications are small low power remote IP appliances.
- Security system, doors access, cameras, alarms
- Displays
- Public address systems
- Wireless access point
- Environmental control
- Telemetry
- Remote environmental monitoring

Obsolete Product(s) - Obsolete Product(s)

Table 1. Device summary

Order code	Nominal input voltage	Nominal output voltage	Max efficiency	Nominal power
SPDCPOE03	48 V	3.3 V	TBD %	10 W

This is preliminary information on a new product now in development or undergoing evaluation. Details are subject to change without notice.

www.st.com

1 Description

SPDCPOE03 is a power module specifically designed to provide an isolated, low-voltage power source to a remote powered device (PD) in power over ethernet (PoE) applications. SPDCPOE03 has full functional compliance with IEEE802.3af. It is designed to extract power from Ethernet cable when sourced by power sourcing equipment (PSE) also conforming to IEEE802.3af. SPDCPOE03 is rated 10 W and incorporate PD detection and PD classification current signatures required for the PSE. The module is compatible with PD classifications class 0. In addition to a fully integrated DC-DC converter, each SPDCPOE03 power module incorporates internal input diode bridges to support both data line and spare line pair standard ethernet connections, a transient suppressor for input over-voltage protection, and an EMI filter to ensure noise compatibility with Ethernet data signals. Other features include: input under voltage lockout (UVLO), soft-start, over-current and short-circuit protection.

Table 2. Pin description

No	Pin name	I/O	Description
J1-1	TX +	I	Ethernet in data line
J1-2	TX -	I	Ethernet in data line
J1-3	RX +	I	Ethernet in data line
J1-4	SP1	I	Ethernet in spare line
J1-5	SP1	I	Ethernet in spare line
J1-6	RX -	I	Ethernet in data line
J1-7	SP2	I	Ethernet in spare line
J1-8	SP2	I	Ethernet in spare line
J2-1	TD +	O	Ethernet out data line
J2-2	TD -	O	Ethernet out data line
J2-3	RD +	O	Ethernet out data line
J2-4		n.c.	
J2-5		n.c.	
J2-6	RD-	O	Ethernet out data line
J2-7		n.c.	
J2-8		n.c.	
J3-1	Vout +	O	Power output +3.3 Volt
J3-2	Vout +	O	Power output +3.3 Volt
J3-3	Vout -	O	Power output 0 Volt
J3-4	Vout -	O	Power output 0 Volt

Obsolete Product(s) - Obsolete Product(s)

2 Typical configuration

Figure 1. Typical power coupling using SPDCPOE03

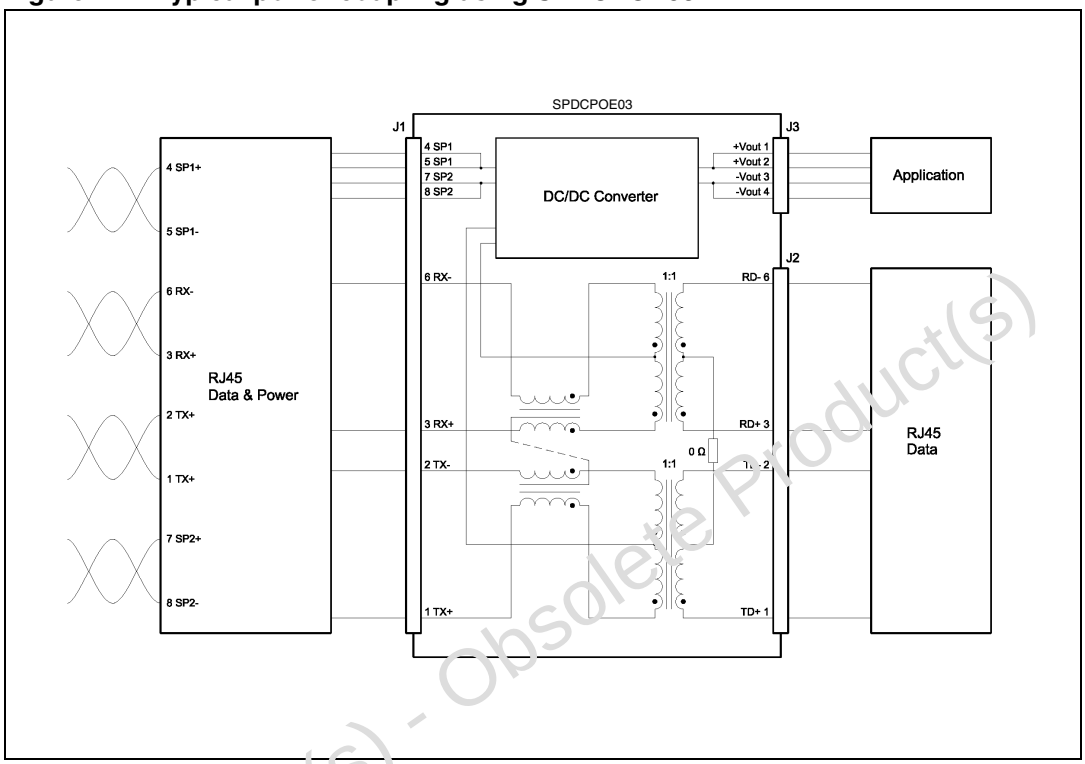

Obsolete Product(s) - Obsolete Product(s)

3 Mechanical data

In order to meet environmental requirements, ST offers these devices in different grades of ECOPACK® packages, depending on their level of environmental compliance. ECOPACK® specifications, grade definitions and product status are available at: www.st.com. ECOPACK is an ST trademark.

Figure 2. Mechanical dimensions

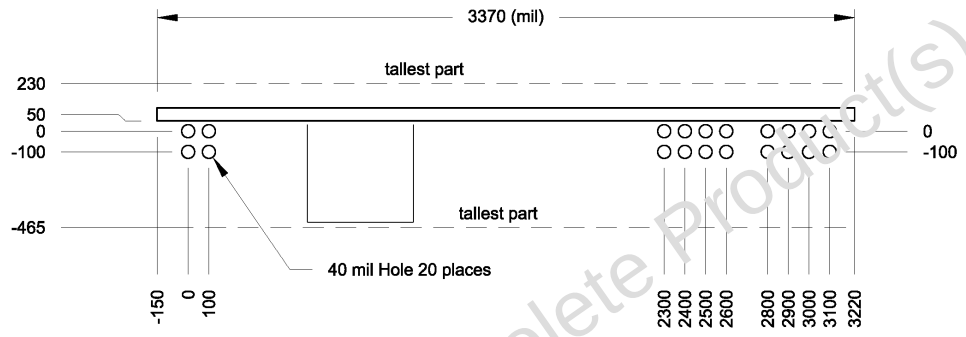

Figure 3. Footprint

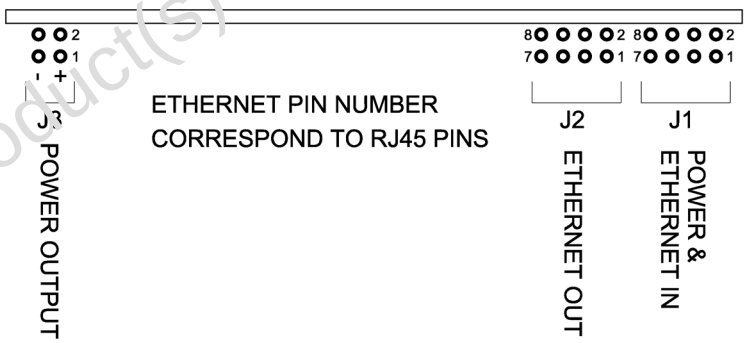

Obsolete Product(s) - Obsolete Product(s)

4 Revision history

Table 3. Document revision history

Date	Revision	Changes
20-Mar-2009	1	Initial release

Obsolete Product(s) - Obsolete Product(s)

Please Read Carefully:

Information in this document is provided solely in connection with ST products. STMicroelectronics NV and its subsidiaries ("ST") reserve the right to make changes, corrections, modifications or improvements, to this document, and the products and services described herein at any time, without notice.

All ST products are sold pursuant to ST's terms and conditions of sale.

Purchasers are solely responsible for the choice, selection and use of the ST products and services described herein, and ST assumes no liability whatsoever relating to the choice, selection or use of the ST products and services described herein.

No license, express or implied, by estoppel or otherwise, to any intellectual property rights is granted under this document. If any part of this document refers to any third party products or services it shall not be deemed a license grant by ST for the use of such third party products or services, or any intellectual property contained therein or considered as a warranty covering the use in any manner whatsoever of such third party products or services or any intellectual property contained therein.

UNLESS OTHERWISE SET FORTH IN ST'S TERMS AND CONDITIONS OF SALE ST DISCLAIMS ANY EXPRESS OR IMPLIED WARRANTY WITH RESPECT TO THE USE AND/OR SALE OF ST PRODUCTS INCLUDING WITHOUT LIMITATION IMPLIED WARRANTIES OF MERCHANTABILITY, FITNESS FOR A PARTICULAR PURPOSE (AND THEIR EQUIVALENTS UNDER THE LAWS OF ANY JURISDICTION), OR INFRINGEMENT OF ANY PATENT, COPYRIGHT OR OTHER INTELLECTUAL PROPERTY RIGHT.

UNLESS EXPRESSLY APPROVED IN WRITING BY AN AUTHORIZED ST REPRESENTATIVE, ST PRODUCTS ARE NOT RECOMMENDED, AUTHORIZED OR WARRANTED FOR USE IN MILITARY, AIR CRAFT, SPACE, LIFE SAVING, OR LIFE SUSTAINING APPLICATIONS, NOR IN PRODUCTS OR SYSTEMS WHERE FAILURE OR MALFUNCTION MAY RESULT IN PERSONAL INJURY, DEATH, OR SEVERE PROPERTY OR ENVIRONMENTAL DAMAGE. ST PRODUCTS WHICH ARE NOT SPECIFIED AS "AUTOMOTIVE GRADE" MAY ONLY BE USED IN AUTOMOTIVE APPLICATIONS AT USER'S OWN RISK.

Resale of ST products with provisions different from the statements and/or technical features set forth in this document shall immediately void any warranty granted by ST for the ST product or service described herein and shall not create or extend in any manner whatsoever, any liability of ST.

ST and the ST logo are trademarks or registered trademarks of ST in various countries.

Information in this document supersedes and replaces all information previously supplied.

The ST logo is a registered trademark of STMicroelectronics. All other names are the property of their respective owners.

© 2009 STMicroelectronics - All rights reserved

STMicroelectronics group of companies

Australia - Belgium - Brazil - Canada - China - Czech Republic - Finland - France - Germany - Hong Kong - India - Israel - Italy - Japan - Malaysia - Malta - Morocco - Singapore - Spain - Sweden - Switzerland - United Kingdom - United States of America

www.st.com

Obsolete Product(s) - Obsolete Product(s)